Current part is item (5) on diagram. Available at www.oshkoshequipment.com

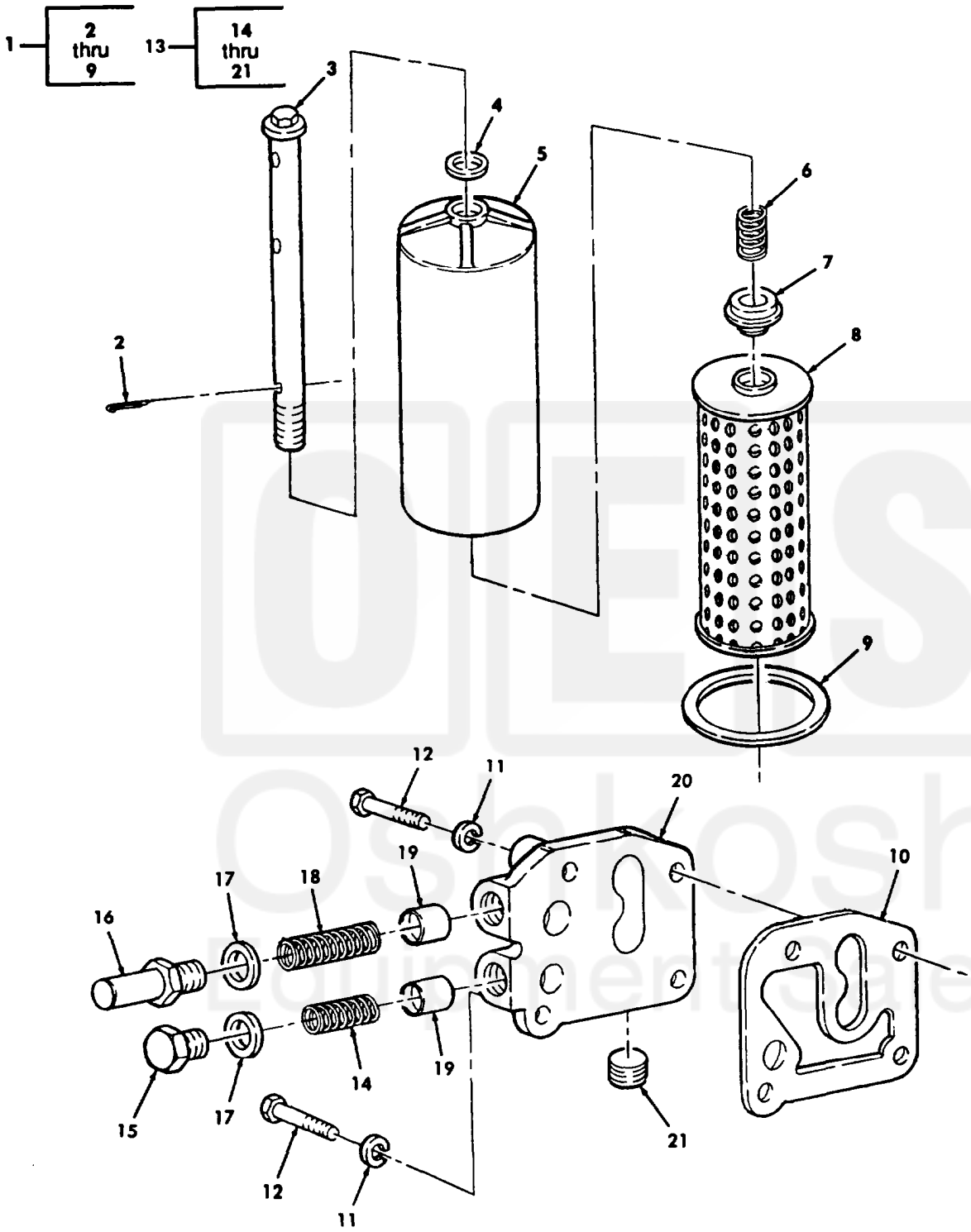

Figure 17. Oil Filter, Oil Pressure Regulator, and Related Parts.

Current part is item (5) on diagram. Available at www.oshkoshequipment.com

Current part is item (5) on diagram. Available at www.oshkoshequipment.com

(1) ITEM NO	(2) SMR CODE	(3) NSN	(4) CAGEC	(5) PART NUMBER	(6) DESCRIPTION AND USABLE ON CODES(UOC)	(7) QTY
					GROUP 0106 ENGINE LUBRICATION SYSTEM	
					FIG. 17 OIL FILTER, OIL PRESSURE REGULATOR, AND RELATED PARTS	
1	PAOZZ	2940001942497	19207	7748873	FILTER,FLUID	1
2	PAOZZ	5315002525987	96906	MS24665-138	.PIN,COTTER PART OF KIT P/N 5702659	1
3	PAOZZ	4730001356529	19207	10951012	.BOLT,FLUID PASSAGE	1
4	KFOZZ		19207	7748905	.GASKET PART OF KIT P/N 5702659	1
5	XAOZZ		19207	10951015	.FILTER BODY FLUID	1
6	PAOZZ	5360009246118	19207	10951016	.SPRING,HELICAL,COMP	1
7	PAOZZ	2940000057698	19207	10951017	.CUP,FLUID FILTER	1
8	KFOZZ	2940005806283	96906	MS35802-3	.FILTER ELEMENT, FLUI PART OF KIT P/N 5702659	1
9	PAOZZ	5330000718728	19207	7748870	.GASKET PART OF KIT P/N 5702659	1
10	PAFZZ	5330009309229	19207	11609963	GASKET PART OF KIT P/N 57K1319	1
11	PAFZZ	5310009594675	96906	MS35340-46	WASHER,LOCK	4
12	PAFZZ	5305007829489	80204	B1821BH038C200N	SCREW,CAP,HEXAGON H	4
13	PAFZZ	4820014517286	19207	12380075	HOUSING ASSEMBLY UOC:B95,B96,437,438,445,446,455,456,503,506,510,511,516	1
14	PAFZZ	5360008514567	19207	10889878	.SPRING,HELICAL,COMP	1
15	PAFZZ	5365004721926	19207	7748969	.PLUG,MACHINE THREAD	1
16	PAFZZ	5365004968424	19207	11641821	.PLUG,MACHINE THREAD	1
17	PAHZZ	5330008342912	96906	MS25769-18	.GASKET PART OF KIT P/N 57K1319	2
18	PAFZZ	5360004968471	19207	11641839	.SPRING,HELICAL,COMP	1
19	PAFZZ	4820014515424	19207	12380074	.PLUNGER	2
20	PAFZZ	2815001682740	19207	11609968	.HOUSING OIL PRESSUR	1
21	PAFZZ	4730005558292	10001	12Z329PC92	.PLUG,PIPE	1

END OF FIGURE

Current part is item (5) on diagram. Available at www.oshkoshequipment.com